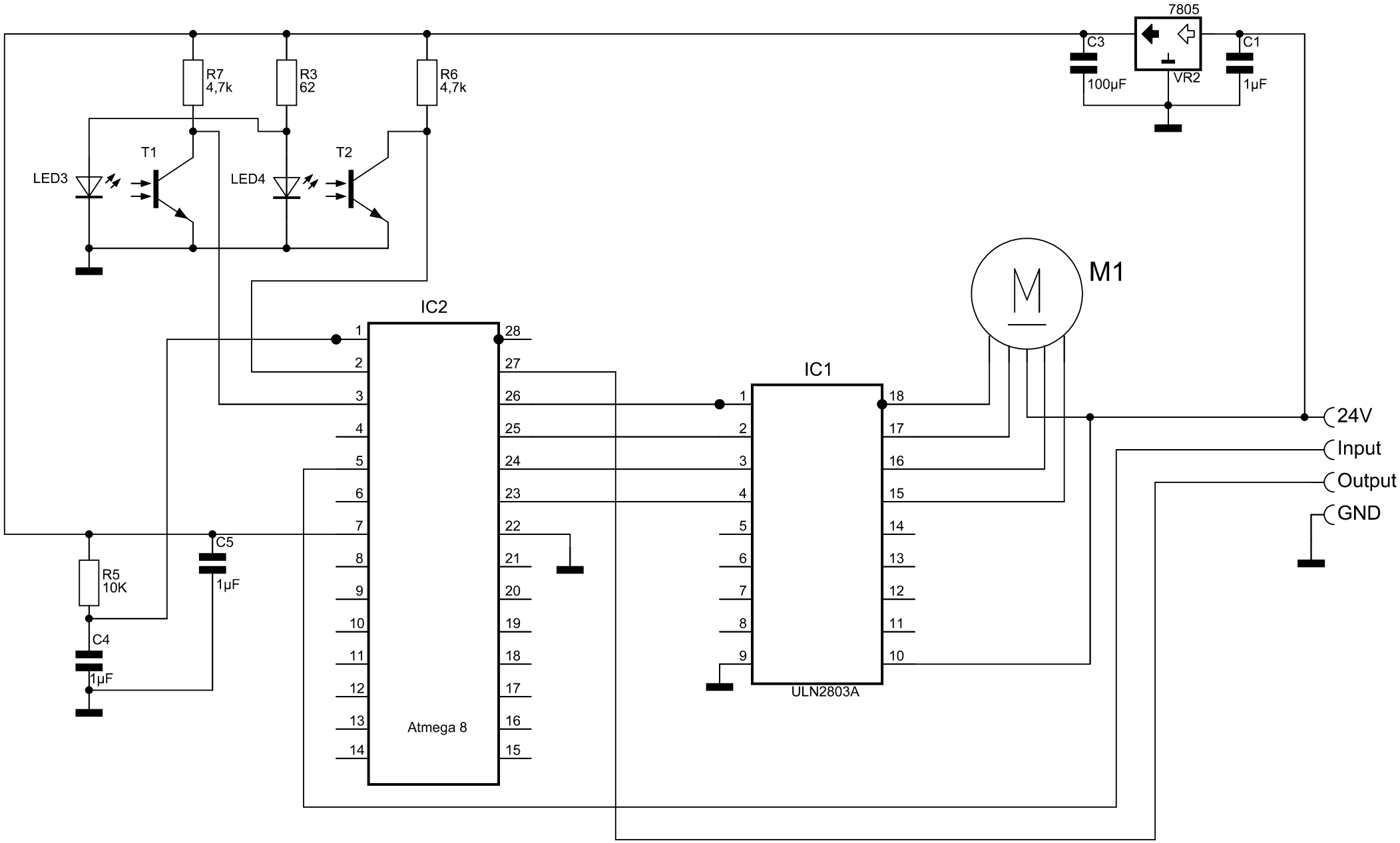
7805
C3
100µF
VR2
C1
1µF
R7
4,7k
R3
62
R6
4,7k
T1
T2
LED3
LED4
M1
IC2
IC1
Atmega 8
ULN2803A
R5
10K
C4
1µF
C5
1µF
24V
Input
Output
GND