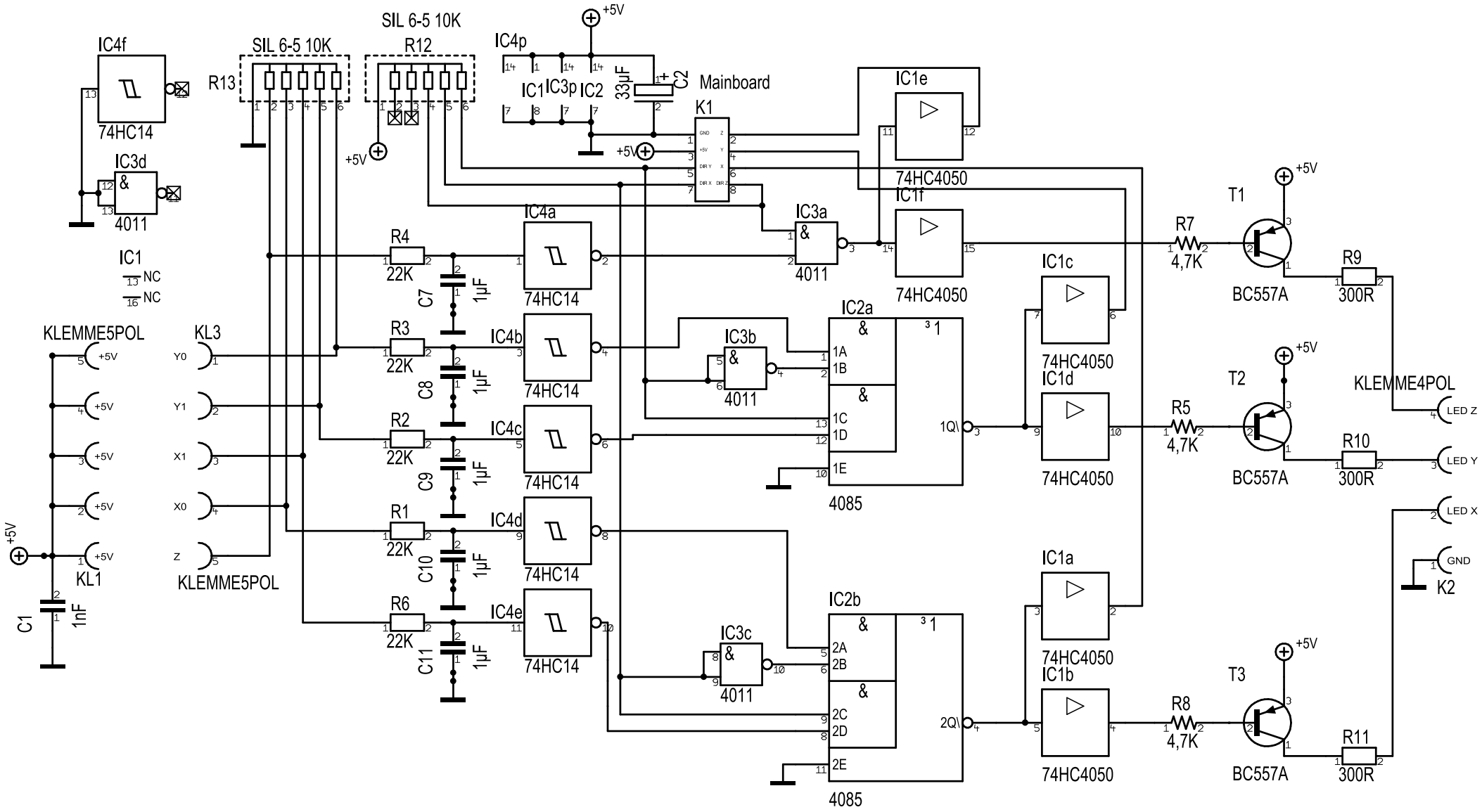
IC4f
74HC14
IC3d
4011
IC1
NC
NC
KLEMME5POL
KL3
KL1
KLEMME5POL
C1
1nF
R13
SIL 6-5 10K
SIL 6-5 10K
R12
+5V
IC4p
IC1
IC3p
IC2
33µF
C2
Mainboard
K1
IC1e
74HC4050
IC1f
74HC4050
IC3a
4011
R4
22K
C7
1µF
IC4a
74HC14
R3
22K
C8
1µF
IC4b
74HC14
R2
22K
C9
1µF
IC4c
74HC14
R1
22K
C10
1µF
IC4d
74HC14
R6
22K
C11
1µF
IC4e
74HC14
IC3b
4011
IC3c
4011
IC2a
4085
IC2b
4085
IC1c
74HC4050
IC1d
74HC4050
IC1a
74HC4050
IC1b
74HC4050
R7
4,7K
R5
4,7K
R8
4,7K
T1
BC557A
T2
BC557A
T3
BC557A
R9
300R
R10
300R
R11
300R
KLEMME4POL
LED Z
LED Y
LED X
GND
K2