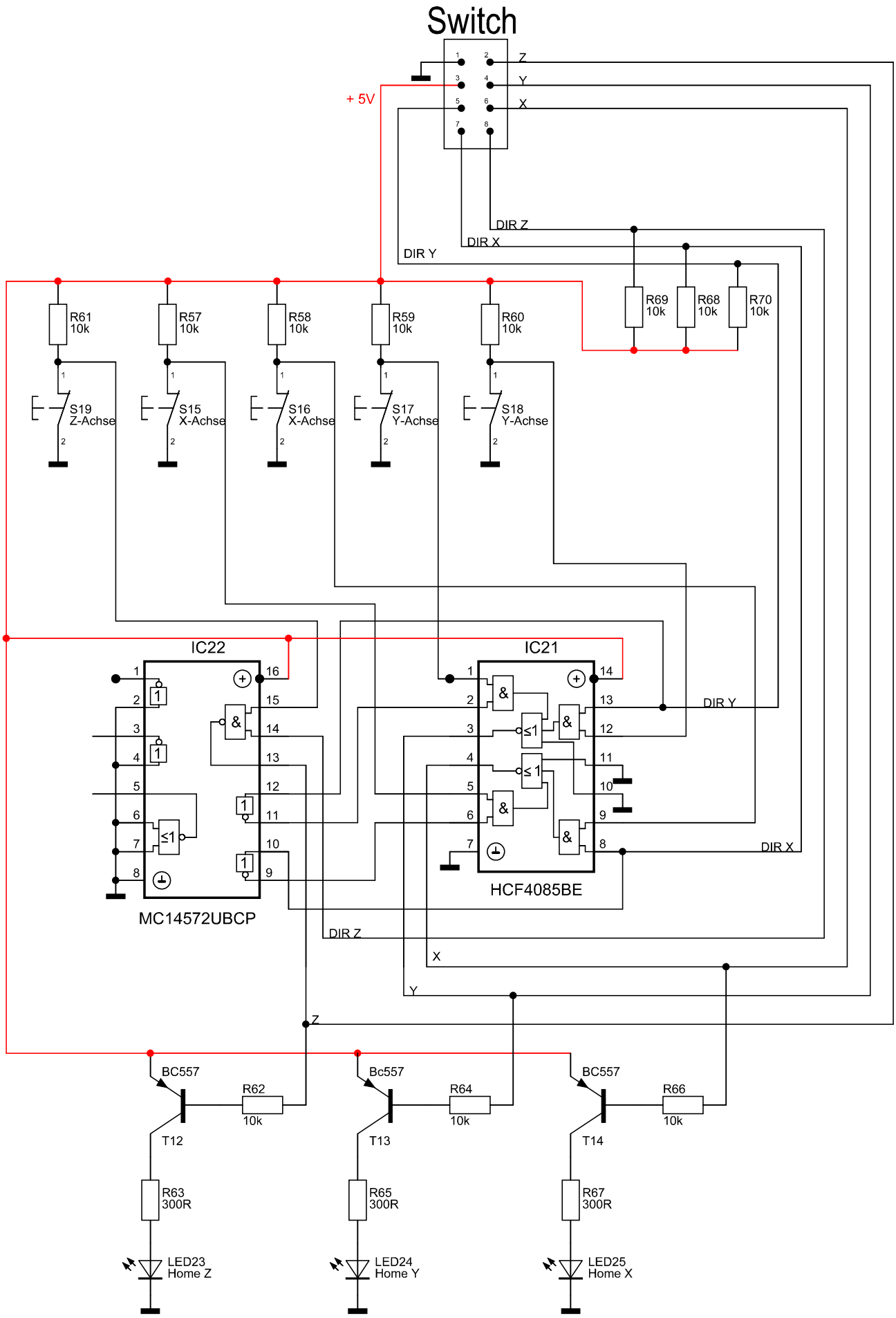
Switch
Z
Y
X
+ 5V
DIR Z
DIR X
DIR Y
R61 10k
R57 10k
R58 10k
R59 10k
R60 10k
R69 10k
R68 10k
R70 10k
S19 Z-Achse
S15 X-Achse
S16 X-Achse
S17 Y-Achse
S18 Y-Achse
IC22
IC21
MC14572UBCP
HCF4085BE
BC557
Bc557
BC557
R62 10k
R64 10k
R66 10k
T12
T13
T14
R63 300R
R65 300R
R67 300R
LED23 Home Z
LED24 Home Y
LED25 Home X